CAD FILE:

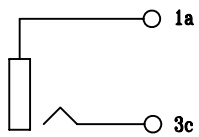

SCHEMATIC
ST-320-01

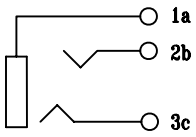

SCHEMATIC
ST-320-02

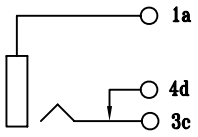

SCHEMATIC
ST-320-03

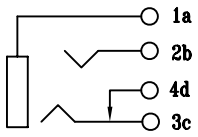

SCHEMATIC
ST-320-05

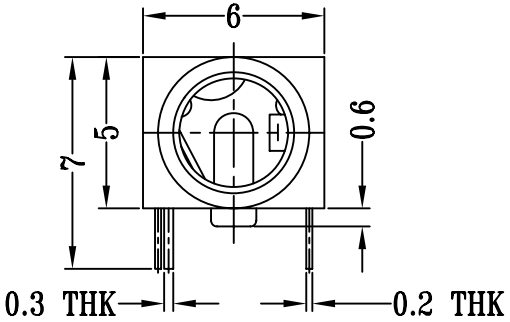

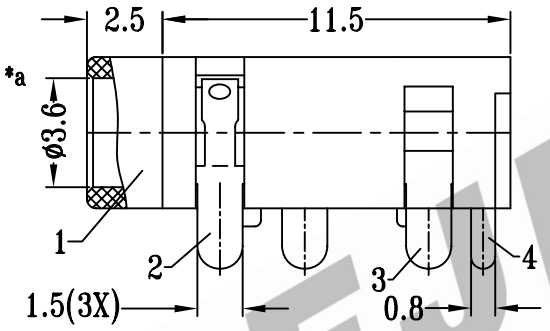

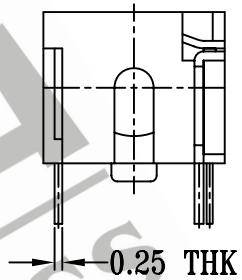

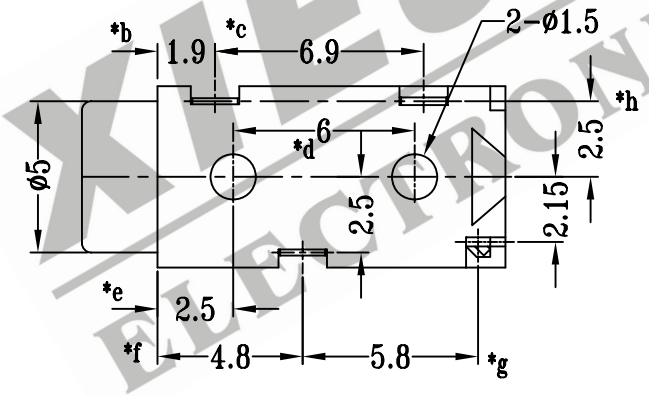

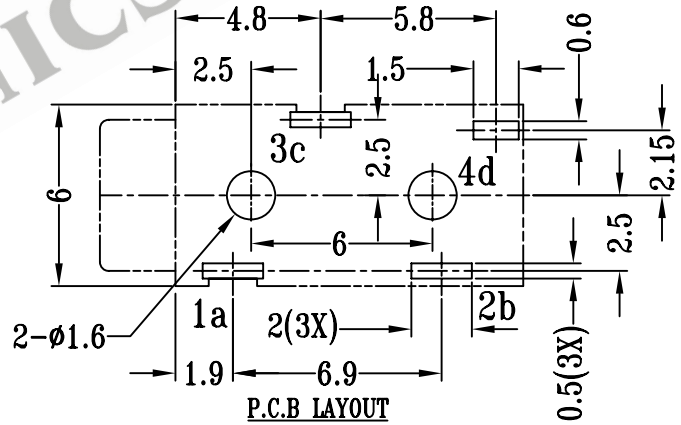

P.C.B LAYOUT

注:带"*"表示关键尺寸(8个)

XIEJIA ELECTRONICS

NO.	PARTS	MATERIALS	Q'TY	FINISH
8				
7				
6				
5				
4	TERMINAL C	BRASS STRIP	1	Ag PLATED OVER Ni PLATED
3	SPRING TERMINAL B	PBS C5210R-SH	1	Ag PLATED OVER Ni PLATED
2	SPRING TERMINAL A	PBS C5210R-H	2	Ag PLATED OVER Ni PLATED
1	CASE	PA46	1	BLACK

TOLERANCE UNLESS SPECIFIED
WITHIN: 1.5±0.1mm
OVER: 1.5±0.2mm

SHENZHEN XIEJIA ELECTRONICS CO.,LTD.

ISSUE	DATE	DESCRIPTIONS OF REVISION	APPD.

TITLE : PHONE JACK
UNIT : mm
DRWG NO.: XJ-DR-ST320-00
MODEL: ST-320
SCALE: 4:1

DWN.	ZHOUYU	2006-5-21
CHK'D	FANGYING	2006-5-21
APPD.	KANGXINAN	2006-5-21

ALL MATERIALS MUST BE COMPLIANT TO ROHS